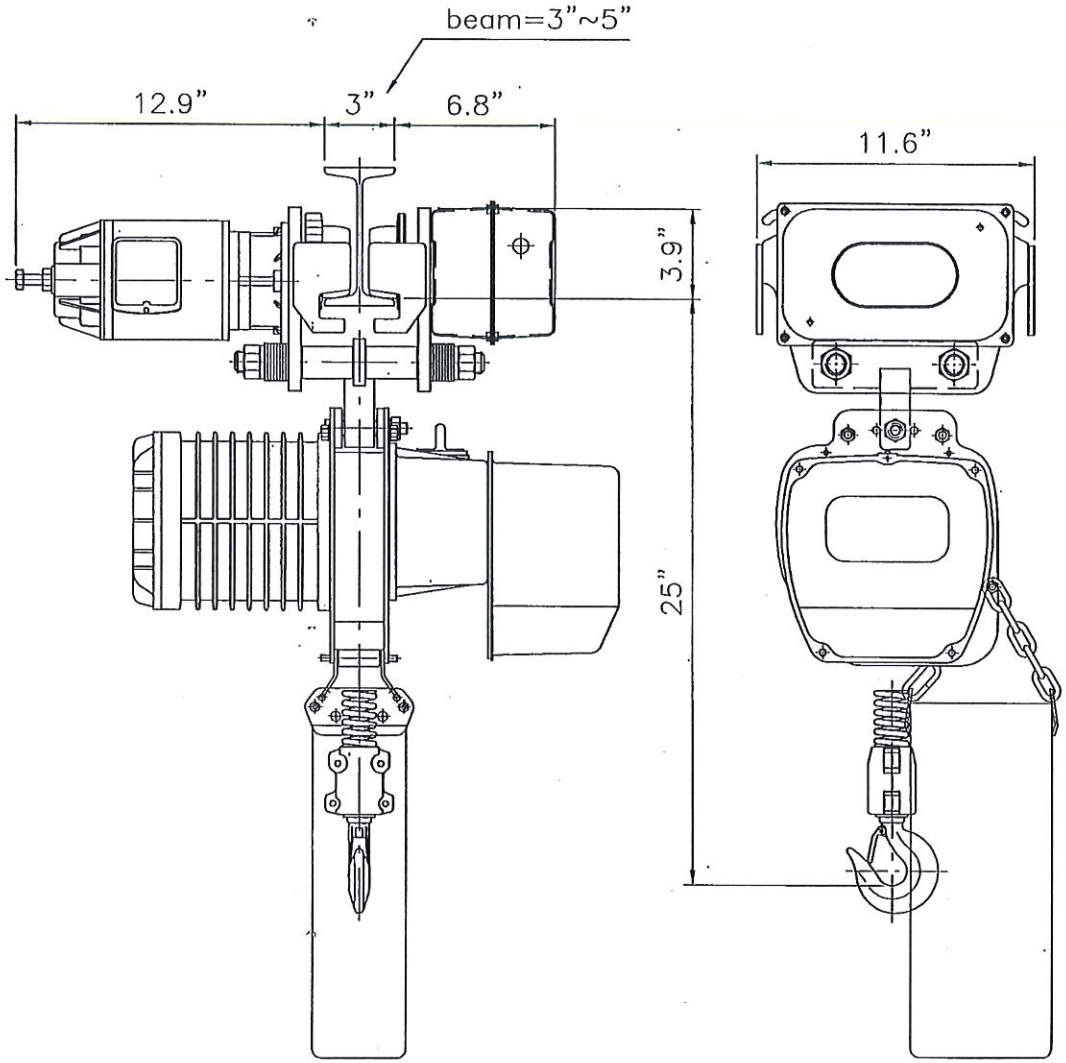

ITEM NO.	DESCRIPTION	QTY.	MATERIAL	WEIGHT	PARTS. NO.
—	—	—	—		—

PARTS NO.	—	DWG. NO.	ZQ1200320307	DWG. NAME	RZP-100+RZMT-100 Lug Mount

				DRAWN	WSS	SCALE	1:8	HEAT TREAT.	—
1	—	—	—	DESIGN	CMH	ASS. NO.		HARDNESS	—
SIGN	CORRECTION	CORRECTOR	DATE	CHECKED	LMS	DATE	2012/04/16		